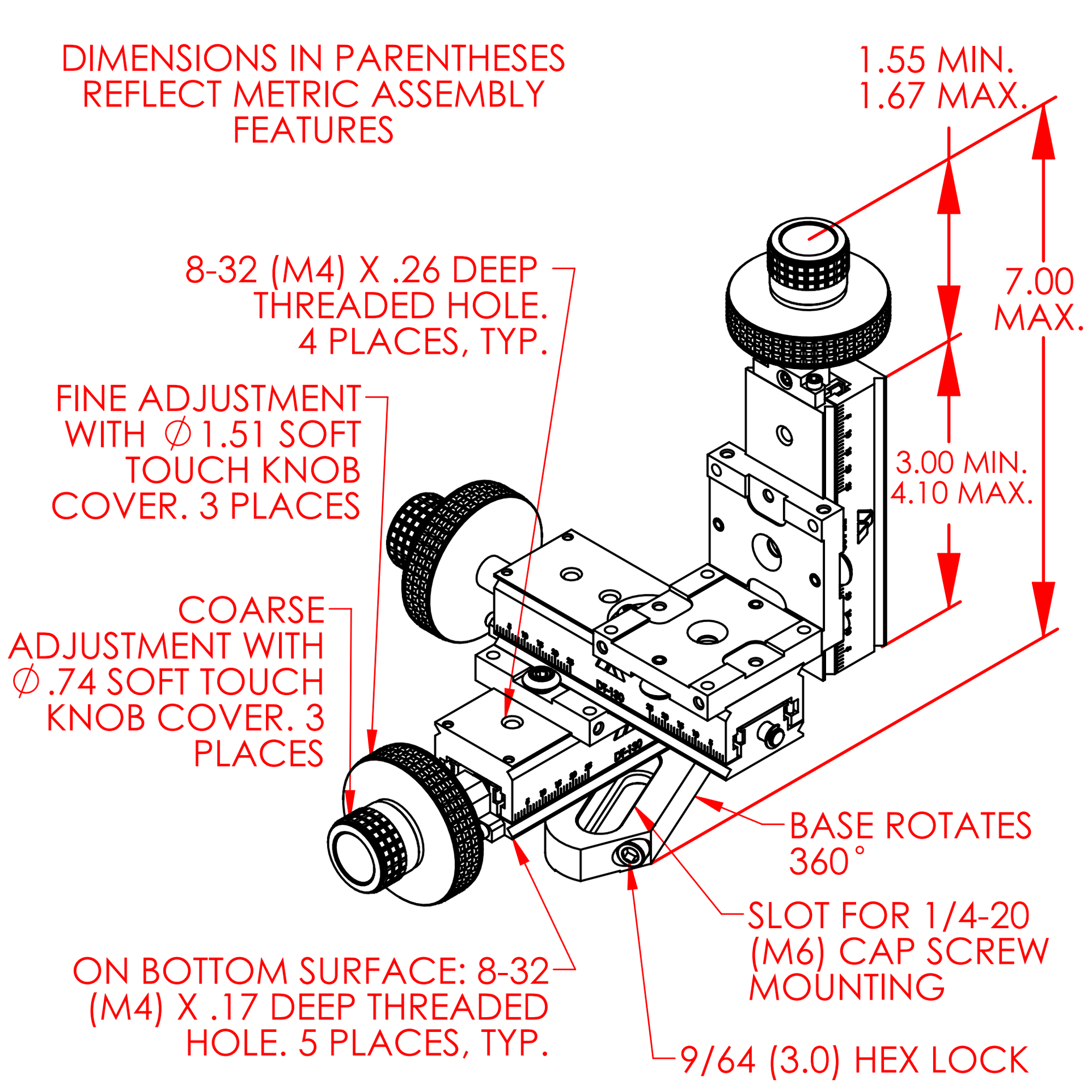
DIMENSIONS IN PARENTHESES REFLECT METRIC ASSEMBLY FEATURES
1.55 MIN.
1.67 MAX.
7.00 MAX.
3.00 MIN.
4.10 MAX.
8-32 (M4) X .26 DEEP THREADED HOLE. 4 PLACES, TYP.
FINE ADJUSTMENT WITH ∅1.51 SOFT TOUCH KNOB COVER. 3 PLACES
COARSE ADJUSTMENT WITH ∅.74 SOFT TOUCH KNOB COVER. 3 PLACES
BASE ROTATES 360°
SLOT FOR 1/4-20 (M6) CAP SCREW MOUNTING
ON BOTTOM SURFACE: 8-32 (M4) X .17 DEEP THREADED HOLE. 5 PLACES, TYP.
9/64 (3.0) HEX LOCK