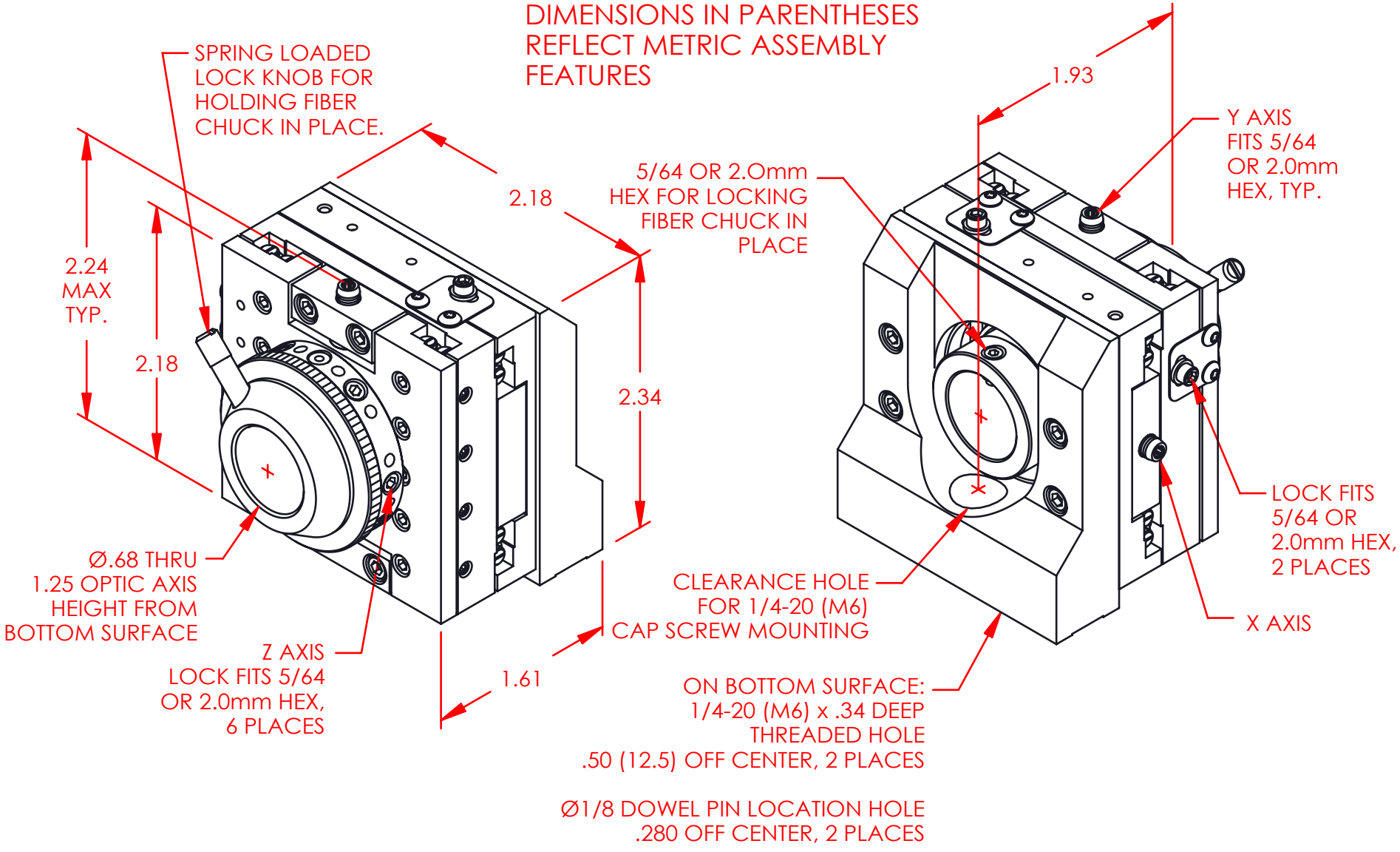
DIMENSIONS IN PARENTHESES REFLECT METRIC ASSEMBLY FEATURES
SPRING LOADED LOCK KNOB FOR HOLDING FIBER CHUCK IN PLACE.
2.24 MAX TYP.
2.18
2.18
2.34
1.61
Ø.68 THRU 1.25 OPTIC AXIS HEIGHT FROM BOTTOM SURFACE
Z AXIS LOCK FITS 5/64 OR 2.0mm HEX, 6 PLACES
5/64 OR 2.0mm HEX FOR LOCKING FIBER CHUCK IN PLACE
1.93
Y AXIS FITS 5/64 OR 2.0mm HEX, TYP.
LOCK FITS 5/64 OR 2.0mm HEX, 2 PLACES
X AXIS
CLEARANCE HOLE FOR 1/4-20 (M6) CAP SCREW MOUNTING
ON BOTTOM SURFACE: 1/4-20 (M6) x .34 DEEP THREADED HOLE .50 (12.5) OFF CENTER, 2 PLACES
Ø1/8 DOWEL PIN LOCATION HOLE .280 OFF CENTER, 2 PLACES